CEBM020902

Shop Manual

430FX-1
430FXL-1
445FXL-1

CRAWLER FELLER BUNCHERS/HARVESTERS

SERIAL NUMBERS **430FX-1 A10001 and up**
430FXL-1 A10001 and up
445FXL-1 A10001 and up

ENGINE **QSC 8.3 TIER 3**

This material is proprietary to Komatsu America Corp. and is not to be reproduced, used, or disclosed except in accordance with written authorization from Komatsu America Corp.

It is our policy to improve our products whenever it is possible and practical to do so. We reserve the right to make changes or improvements at any time without incurring any obligation to install such changes on products sold previously.

Due to this continuous program of research and development, revisions may be made to this publication. It is recommended that customers contact their distributor for information on the latest revision.

Copyright 2011 Komatsu
Printed in U.S.A.
Komatsu America Corp.

October 2011

The affected pages are indicated by using the following marks. It is requested that necessary actions be taken to these pages according to the table below.

Mark	Indication	Action
❍	New page to be added	Add
●	Page to be replaced	Replace
( )	Page to be deleted	Discard

Mark	Page	Rev
●	00-1	②
●	00-2	②
●	00-2-1	②
●	00-2-2	②
●	00-2-3	②
●	00-2-4	②
●	00-3	②
	00-4	
	00-5	
●	00-6	②
●	00-7	②
	00-8	
	00-9	
	00-10	
	00-11	
	00-12	
	00-13	
	00-14	
	00-15	
	00-16	
	00-17	
	00-18	
●	00-19	②
	00-20	
	00-21	
	00-22	
	00-23	
	00-24	

Mark	Page	Rev
	00-25	
	00-26	
	00-27	
	00-28	
	00-29	
	00-30	
	00-31	
	00-32	
	00-33	
	00-34	
	00-35	
	00-36	
❍	00-37	②
❍	00-38	②
❍	00-39	②
❍	00-40	②
●	01-1	②
●	01-2	②
●	01-3	②
	01-4	
	01-5	
●	01-6	②
●	01-7	②
●	01-8	②
	01-9	
●	01-10	②
	01-11	

Mark	Page	Rev
●	01-12	②
●	01-13	②
	01-14	
●	01-15	②
	01-16	
●	01-17	②
●	01-18	②
●	01-19	②
●	01-20	②
●	01-21	②
●	01-22	②
●	01-23	②
●	01-24	②
●	01-25	②
●	01-26	②
❍	01-27	②
❍	01-28	②
❍	01-29	②
❍	01-30	②
❍	01-31	②
❍	01-32	②
❍	01-33	②
❍	01-34	②
	30-1	
	30-2	
●	30-3	②
●	30-4	②

Mark	Page	Rev
●	30-5	②
●	30-6	②
●	30-7	②
●	30-8	②
●	30-9	②
●	30-10	②
●	30-11	②
●	30-12	②
●	30-13	②
●	30-14	②
●	30-15	②
●	30-16	②
( )	30-17	②
( )	30-18	②
	40-1	
	40-2	
	40-3	
	40-4	
	40-5	
	40-6	
	40-7	
	40-8	
	40-9	
	40-10	
	40-11	
	40-12	
	40-13	

Mark	Page	Rev
	40-14	
	40-15	
	40-16	
	40-17	
	40-18	
	40-19	
	40-20	
	40-21	
	40-22	
	40-23	
	40-24	
	40-25	
	40-26	
●	40-27	②
	40-28	
	40-29	
	40-30	
	40-31	
	40-32	
	40-33	
	40-34	
	40-35	
	40-36	
	40-37	
	40-38	
	40-39	
	40-40	
	40-41	
	40-42	
	40-43	
	40-44	
	40-45	
	40-46	

Mark	Page	Rev
	40-47	
	40-48	
	40-49	
	40-50	
	40-51	
	40-52	
	40-53	
	40-54	
	40-55	
	40-56	
	40-57	
	40-58	
	40-59	
	40-60	
	40-61	
	40-62	
	40-63	
●	40-64	②
	40-65	
	40-66	
	40-67	
	40-68	
	40-69	
	40-70	
	40-71	
	40-72	
	40-73	
●	40-74	②
	40-75	
	40-76	
	40-77	
	40-78	
	40-79	

Mark	Page	Rev
	40-80	
●	40-81	②
	40-82	
●	40-83	②
	40-84	
	40-85	
	40-86	
●	40-87	②
●	40-88	②
	40-89	
	40-90	
	40-91	
	40-92	
●	40-93	②
	40-94	
	40-95	
	40-96	
	40-97	
	40-98	
●	40-99	②
	40-100	
	40-101	
	40-102	
	40-103	
	40-104	
	40-105	
	40-106	
	40-107	
	40-108	
	40-109	
	40-110	
	40-111	
	40-112	

Mark	Page	Rev
●	50-1	②
●	50-2	②
●	50-3	②
●	50-4	②
	50-5	
	50-6	
	50-7	
●	50-8	②
	50-9	
	50-10	
	50-11	
	50-12	
	50-13	
	50-14	
	50-15	
	50-16	
	50-17	
●	50-18	②
	50-19	
	50-20	
●	50-21	②
●	50-22	②
●	50-23	②
●	50-24	②
●	50-25	②
●	50-26	②
●	50-27	②
●	50-28	②
●	50-29	②
●	50-30	②
●	50-31	②
●	50-32	②

Mark	Page	Rev
●	50-33	②
●	50-34	②
	50-35	
●	50-36	②
	50-37	
	50-38	
●	50-39	②
●	50-40	②
●	50-41	②
●	50-42	②
	50-43	
●	50-44	②
●	50-45	②
●	50-46	②
●	50-47	②
●	50-48	②
	50-49	
●	50-50	②
●	50-51	②
●	50-52	②
●	50-53	②
●	50-54	②
●	50-55	②
●	50-56	②
●	50-57	②
●	50-58	②
●	50-59	②
●	50-60	②
	50-61	
	50-62	
●	50-63	②
●	50-64	②
●	50-65	②

Mark	Page	Rev
●	50-66	②
●	50-67	②
●	50-68	②
●	50-69	②
●	50-70	②
●	50-71	②
●	50-72	②
●	50-73	②
●	50-74	②
●	50-75	②
●	50-76	②
	50-77	
	50-78	
	50-79	
●	50-80	②
●	50-81	②
●	50-82	②
	50-83	
	50-84	
●	50-85	②
	50-86	
	50-87	
	50-88	
●	50-89	②
	50-90	
	50-91	
●	50-92	②
●	50-93	②
	50-94	
	50-95	
	50-96	
	50-97	
	50-98	

Mark	Page	Rev
	50-99	
	50-100	
	50-101	
	50-102	
●	50-103	②
	50-104	
●	50-105	②
	50-106	
	50-107	
	50-108	
●	50-109	②
	50-110	
●	50-111	②
	50-112	
	50-113	
	50-114	
	50-115	
	50-116	
	50-117	
	50-118	
●	50-119	②
	50-120	
	50-121	
	50-122	
	50-123	
	50-124	
	50-125	
	50-126	
	50-127	
	50-128	
	50-129	
	50-130	
	50-131	

Mark	Page	Rev
	50-132	
	50-133	
	50-134	
	50-135	
	50-136	
	50-137	
	50-138	
●	50-139	②
	50-140	
	50-141	
	50-142	
	50-143	
	50-144	
	50-145	
	50-146	
	50-147	
	50-148	
	50-149	
	50-150	
	50-151	
	50-152	
	50-153	
	50-154	
●	50-155	②
●	50-156	②
●	50-157	②
●	50-158	②
	50-159	
	50-160	
	50-161	
	50-162	
	50-163	
	50-164	

Mark	Page	Rev
	50-165	
	50-166	
	50-167	
	50-168	
	50-169	
	50-170	
	50-171	
	50-172	
	50-173	
●	50-174	②
●	50-175	②
●	50-176	②
●	50-177	②
●	50-178	②
●	50-179	②
	50-180	
	50-181	
	50-182	
●	50-183	②
●	50-184	②
●	50-185	②
	50-186	
●	50-187	②
●	50-188	②
●	50-189	②
●	50-190	②
●	50-191	②
	50-192	
	50-193	
	50-194	
	50-195	
	50-196	
	50-197	

Mark	Page	Rev
	50-198	
	50-199	
	50-200	
	50-201	
	50-202	
	50-203	
	50-204	
( )	50-205	②
( )	50-206	②
	60-1	
	60-2	
	90-1	
	90-2	
	90-3	
	90-4	
	90-5	
	90-6	
	90-7	
	90-8	
	90-9	
	90-10	
	90-11	
	90-12	
	90-13	
	90-14	
	90-15	
	90-16	
	90-17	
	90-18	
	90-19	
	90-20	

Mark	Page	Rev
	90-21	
	90-22	
	90-23	
	90-24	
	90-25	
	90-26	
	90-27	
	90-28	
	90-29	
	90-30	
	90-31	
	90-32	
	90-33	
	90-34	
	90-35	
	90-36	
	90-37	
	90-38	
	90-39	
	90-40	
	90-41	
	90-42	
	90-43	
	90-44	
	90-45	
	90-46	
	90-47	
	90-48	
	90-49	
	90-50	
	90-51	
	90-52	
	90-53	

Mark	Page	Rev
	90-54	
	90-55	
	90-56	
	90-57	
	90-58	
	90-59	
	90-60	
	90-61	
	90-62	
	90-63	
	90-64	
	90-65	
	90-66	
	90-67	
	90-68	
	90-69	
	90-70	
	90-71	

CONTENTS

01 GENERAL 01-1

30 TESTING AND ADJUSTING 30-1

40 TROUBLESHOOTING 40-1

50 DISASSEMBLY AND ASSEMBLY. 50-1

60 AIR CONDITIONER 60-1

90 DIAGRAMS AND SCHEMATICS. 90-1

SAFETY

Safety Notice

Important Safety Notice

Proper service and repair is extremely important for the safe operation of your machine. The service and repair techniques recommended and described in this manual are both effective and safe methods of operation. Some of these operations require the use of tools specially designed for the purpose.

To prevent injury to workers, the symbols are used to mark safety precautions in this manual. The cautions accompanying these symbols should always be followed carefully. If any dangerous situation arises or may possibly arise, first consider safety, and take the necessary actions to deal with the situation.

General Precautions

WARNING! Mistakes in operation are extremely dangerous. Read the OPERATION & MAINTENANCE MANUAL carefully BEFORE operating the machine.

1. Before performing any greasing or repairs, read all the precautions given on the decals which are fixed to the machine.
2. When performing any operation, always wear safety shoes and helmet. Do not wear loose work clothes, or clothes with buttons missing.
   - Always wear safety glasses when hitting parts with a hammer.
   - Always wear safety glasses when grinding parts with a grinder, etc.
3. If welding repairs are needed, always have a trained, experienced welder perform the work. When performing welding work, always wear welding gloves, apron, glasses, cap and other clothes suited for welding work.

WARNING! Never modify, weld, cut, or drill on any part of a ROPS structure. Doing so may weaken the structure which could lead to possible failure in a rollover situation

4. When performing any operation with two or more workers, always agree on operating procedures before starting. Always inform your fellow workers before starting any step of the operation. Before starting work, hang UNDER REPAIR signs on the controls in the operator's compartment.
5. Keep all tools in good condition and learn the correct way to use them.
6. Decide a place in the repair workshop to keep tools and removed parts. Always keep the tools and parts in their correct places. Always keep the work area clean and make sure that there is no dirt or oil on the floor. Smoke only in the areas provided for smoking. Never smoke while working.

Preparations For Work

1. Before adding oil or making repairs, park the machine on hard, level ground, and block the wheels or tracks to prevent the machine from moving.
2. Before starting work, lower blade, ripper, bucket or any other work equipment to the ground. If this is not possible, insert the safety pin or use blocks to prevent the work equipment from falling. In addition, be sure to lock all the control levers and hang warning signs on them.
3. When disassembling or assembling, support the machine with blocks, jacks or stands before starting work.
4. Remove all mud and oil from the steps or other places used to get on and off the machine. Always use the handrails, ladders or steps when getting on or off the machine. Never jump on or off the machine. If it is impossible to use the handrails, ladders or steps, use a stand to provide safe footing.

Precautions During Work

1. When removing oil filler cap, drain plug, or hydraulic pressure measuring plugs, loosen them slowly to prevent oil from spurting out. Before disconnecting or removing components of the oil, cooling, or air circuits, first completely remove pressure from the circuit.
2. The coolant and oil in the circuits is hot when the engine is stopped, so be careful not to get burned. Wait for the oil and coolant to cool down before performing any work on the oil or cooling circuits.
3. Before starting work, remove the leads from the battery. ALWAYS remove lead from the negative (-) terminal first.

4. When raising heavy components, use a hoist or crane. Check that the wire rope, chains and hooks are free from damage. Always use lifting equipment which has ample capacity. Install the lifting equipment at the correct places. Use a hoist or crane and operate slowly to prevent the component from hitting any other part. Do not work with any part still raised by the hoist or crane.

5. When removing covers which are under internal pressure or under pressure from a spring, always leave two bolts in position on opposite sides. Slowly release the pressure, then slowly loosen the bolts to remove.

6. When removing components, be careful not to break or damage the wiring. Damaged wiring may cause electrical fires.

7. When removing piping, stop the fuel or oil from spilling out. If any fuel or oil drips on to the floor, wipe it up immediately. Fuel or oil on the floor can cause you to slip, or can even start fires.

8. Never use flammable liquids to clean parts, use only non-flammable approved cleaning solutions to clean parts.

9. Be sure to assemble all parts again in their original places. Replace any damaged part with new parts.
   - When installing hoses and wires, be sure that they will not be damaged by contact with other parts when the machine is being operated.

10. When installing high pressure hoses, make sure that they are not twisted. Damaged tubes are dangerous, so be extremely careful when installing tubes for high pressure circuits. Also check that connecting parts are correctly installed.

11. When assembling or installing parts, always use the specified tightening torques. When installing protective parts such as guards, or parts which vibrate violently or rotate at high speed, be particularly careful to check that they are installed correctly.

12. When aligning two holes, never insert your fingers or hand. Be careful not to get your fingers caught in a hole.

13. When measuring hydraulic pressure, check that the measuring tool is correctly assembled before taking any measurements.

14. Take care when removing or installing the tracks of track-type machines. When removing the track, the track separates suddenly, so never let anyone stand at either end of the track.

15. Precautions for disconnecting and connecting hoses and tubes in air conditioner circuit.
    A. Disconnection

WARNING! Collect the air conditioner refrigerant gas (R134a).
If the refrigerant gas (R134a) gets in your eyes, you may lose your sight. Accordingly, when collecting or adding it, you must be qualified for handling the refrigerant and put on protective goggles.

    B. Connection

       i. When installing the air conditioner circuit hoses and tubes, take care that dirt, dust, water, etc. will not enter them.

       ii. When connecting the air conditioner hoses and tubes, check that O-rings (1) are fitted to their joints.

       iii. Check that each O-ring is not damaged or deteriorated.

       iv. When connecting the refrigerant piping, apply compressor oil for refrigerant (R134a) (DENSO: ND-OIL8, ZEXEL: ZXL100PG (equivalent to PAG46)) to its O-rings.

★ Example of O-ring (Fitted to every joint of hoses and tubes)

★ For tightening torque, see the precautions for installation in each section of "Disassembly and Assembly".

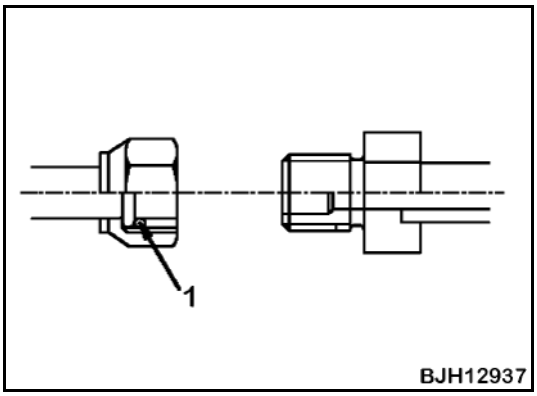

16. When jump starting the machine, only use a machine of similar size and voltage. Never use an arc welder or other electrical generating equipment to jump start the machine. Carefully review the safety and procedures for jump starting the machine.

GENERAL

This shop manual has been prepared as an aid to improve the quality of repairs by giving the serviceman an accurate understanding of the product and by showing him the correct way to perform repairs and make judgements. Make sure you understand the contents of this manual and use it to full effect at every opportunity.

This shop manual mainly contains the necessary technical information for operations performed in a service workshop. For ease of understanding, the manual is divided into the following sections. These sections are further divided into each main group of components.

01 GENERAL

This section lists the general machine dimensions, performance specifications, component weights, and fuel, coolant and lubricant specification charts.

10 STRUCTURE, FUNCTION AND MAINTENANCE STANDARD

This section explains the structure and function of each component. It serves not only to give an understanding of the structure, but also serves as reference material for troubleshooting. In addition, this section gives the judgement standards when inspecting disassembled parts.

20 STANDARD VALUE TABLE

This section explains the standard values for new machine and judgement criteria for testing, adjusting and troubleshooting. This standard value table is used to check the standard values in testing and adjusting and to judge parts in troubleshooting.

30 TESTING AND ADJUSTING

This section explains checks to be made before and after performing repairs, as well as adjustments to be made at completion of the checks and repairs.

40 TROUBLESHOOTING

Troubleshooting charts correlating “Problems” to “Causes” are also included in this section.

50 DISASSEMBLY AND ASSEMBLY

This section explains the order to be followed when removing, installing, disassembling or assembling each component, as well as precautions to be taken for these operations.

60 AIR CONDITIONER

This section explains the structure and function of each air conditioning component. In addition, it has the testing and adjusting, troubleshooting, disassembly, assembly and corrections of the air conditioning system.

90 DIAGRAMS AND SCHEMATICS

This section has the foldout drawings for the machine.

NOTICE

The specifications contained in this shop manual are subject to change at any time and without any advance notice. Contact your distributor for the latest information.

HOW TO READ THE SHOP MANUAL

Volumes

Shop manuals are issued as a guide to performing repairs. They are divided as follows:

Chassis volume: Issued for every machine model
Engine volume: Issued for each engine series

Electrical volume: Each issued as one to cover all models
Attachment volume: Each issued as one to cover all models

These various volumes are designed to avoid duplication of information. Therefore to deal with all repairs for any model, it is necessary that chassis, engine, electrical and attachment be available.

Distribution And Updating

Any additions, amendments or other changes will be sent to your distributors. Get the most up-to-date information before you start any work.

Filing Method

1. See the page number on the bottom of the page. File the pages in correct order.
2. Following examples show how to read the page number:
   Example:

   10 - 3
   - Item number (10. Structure and Function)
   - Consecutive page number for each item

3. Additional pages: Additional pages are indicated by a hyphen (-) and numbered after the page number. File as in the example.
   Example:

10-4
10-4-1
10-4-2 — Added pages
10-5

Revised Edition Mark

When a manual is revised, an edition mark (①②③…) is recorded on the bottom outside corner of the pages.

Revisions

Revised pages are shown at the LIST OF REVISED PAGES between the title page and SAFETY page.

Symbols

So that the shop manual can be of ample practical use, important places for safety and quality are marked with the following symbols.

Symbol	Item	Remarks
	Safety	Special safety precautions are necessary when performing the work.
★	Caution	Special technical precautions or other precautions for preserving standards are necessary when performing the work.
	Weight	Weight of parts or systems. Caution necessary when selecting hoisting wire or when working posture is important, etc.
	Tightening torque	Places that require special attention for tightening torque during assembly.
	Coat	Places to be coated with adhesives and lubricants etc.
	Fill	Places where oil, water or fuel must be added, and the capacity.
	Drain	Places where oil or water must be drained, and quantity to be drained.

HOISTING INSTRUCTIONS

Hoisting

WARNING! Heavy parts (25 kg or more) must be lifted with a hoist etc. In the DISASSEMBLY AND ASSEMBLY section, every part weighing 25 kg or more is indicated clearly with the symbol.

- If a part cannot be smoothly removed from the machine by hoisting, the following checks should be made:

1. Check for removal of all bolts fastening the part to the relative parts.
2. Check for existence of another part causing interface with the part to be removed.

Wire Ropes

1. Use adequate ropes depending on the weight of parts to be hoisted, referring to the table below:

Wire ropes (Standard "Z" or "S" twist ropes without galvanizing)		
Rope diameter	Allowable load	
mm	kN	tons
10	9.8	1.0
11.2	13.7	1.4
12.5	15.7	1.6
14	21.6	2.2
16	27.5	2.8
18	35.3	3.6
20	43.1	4.4
22.4	54.9	5.6
30	98.1	10.0
40	176.5	18.0
50	274.6	28.0
60	392.2	40.0

★ The allowable load value is estimated to be 1/6 or 1/7 of the breaking strength of the rope used. Sling wire ropes from the middle portion of the hook.

2. Slinging near the edge of the hook may cause the rope to slip off the hook during hoisting, and a serious accident can result. Hooks have maximum strength at the middle portion.

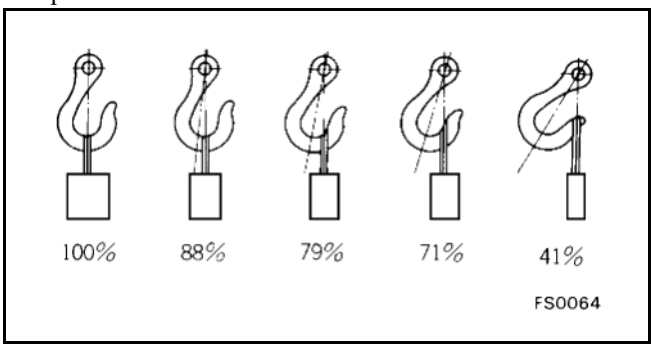

3. Do not sling a heavy load with one rope alone, but sling with two or more ropes symmetrically wound on to the load.

WARNING! Slinging with one rope may cause turning of the load during hoisting, untwisting of the rope, or slipping of the rope from its original winding position on the load, which can result in a dangerous accident

4. Do not sling a heavy load with ropes forming a wide hanging angle from the hook. When hoisting a load with two or more ropes, the force subjected to each rope will increase with the hanging angles. The table below shows the variation of allowable load (kg) when hoisting is made with two ropes, each of which is allowed to sling up to 1000 kg vertically, at various hanging angles. When two ropes sling a load vertically, up to 2000 kg of total weight can be suspended. This weight becomes 1000 kg when two ropes make a 120° hanging angle. On the other hand, two ropes are subject to an excessive force as large as 4000 kg if they sling a 2000 kg load at a lifting angle of 150°.

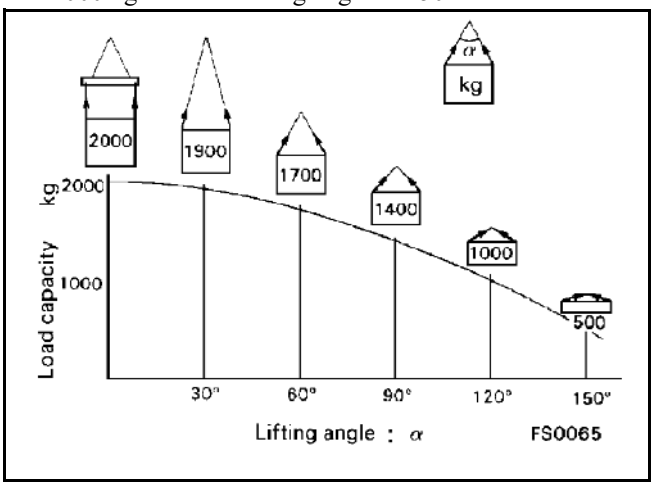

HANDLING ELECTRIC EQUIPMENT AND HYDRAULIC COMPONENTS

To maintain the performance of the machine over a long period, and to prevent failures or other troubles before they occur, correct operation, maintenance and inspection, troubleshooting, and repairs must be performed. This section deals particularly with correct repair procedures for mechatronics and is aimed at improving the quality of repairs. For this purpose, it gives sections on "Handling electric equipment" and "Handling hydraulic equipment" (particularly gear oil and hydraulic oil).

Points To Remember When Handling Electric Equipment

1. Handling wiring harnesses and connectors.
   - Wiring harnesses consist of wiring connecting one component to another component, connectors used for connecting and disconnecting one wire from another wire, and protectors or tubes used for protecting the wiring.
   - Compared with other electrical components fitted in boxes or cases, wiring harnesses are more likely to be affected by the direct effects of rain, water, heat, or vibration. Furthermore, during inspection and repair operations, they are frequently removed and installed again, so they are likely to suffer deformation or damage.
   - For this reason, it is necessary to be extremely careful when handling wiring harnesses.

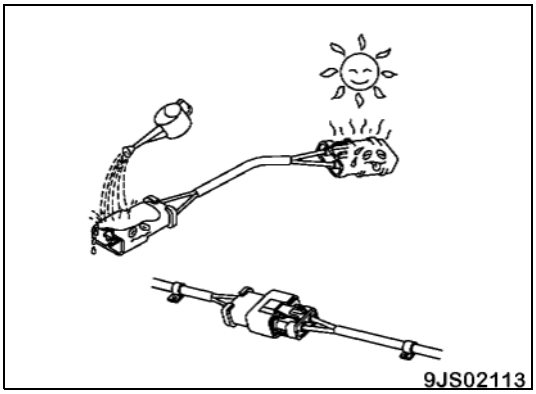

2. Main failures occurring in wiring harness.
   A. Defective contact of connectors (defective contact between male and female).
      - Problems with defective contact are likely to occur because the male connector is not properly inserted into the female connector, or because one or both connectors are deformed or the position is not correctly aligned, or there is corrosion or oxidation of the contact surfaces.

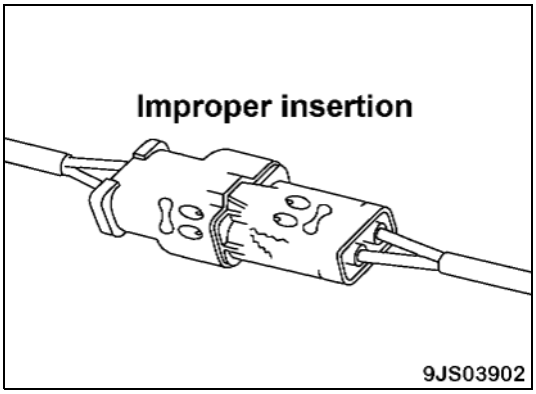

   B. Defective crimping or soldering of connectors.
      - The pins of the male and female connectors are in contact at the crimped terminal or soldered portion, but if there is excessive force brought to bear on the wiring, the plating at the joint will peel and cause improper connection or breakage.

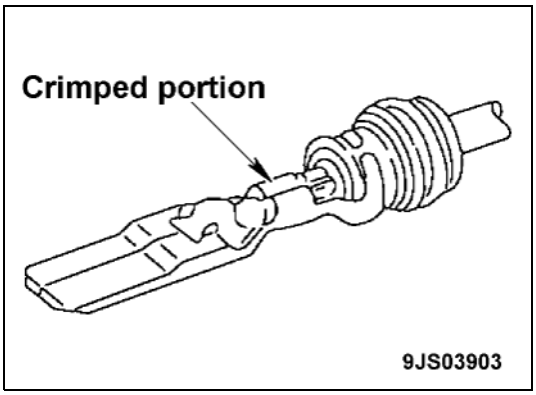

C. Disconnections in wiring.

- If the wiring is held and the connectors are pulled apart, or components are lifted with a crane with the wiring still connected, or a heavy object hits the wiring, the crimping of the connector may separate, or the soldering may be damaged, or the wiring may be broken.

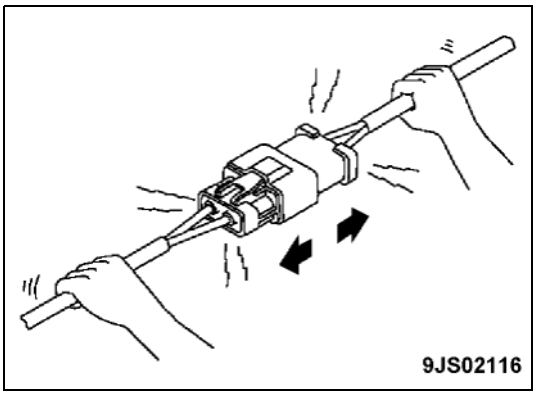

D. High-pressure water entering connector.

- The connector is designed to make it difficult for water to enter (drip-proof structure), but if high-pressure water is sprayed directly on the connector, water may enter the connector, depending on the direction of the water jet.
- Accordingly, take care not splash water over the connector. The connector is designed to prevent water from entering, but at the same time, if water does enter, it is difficult for it to be drained.
- Therefore, if water should get into the connector, the pins will be short-circuited by the water, so if any water gets in, immediately dry the connector or take other appropriate action before passing electricity through it.

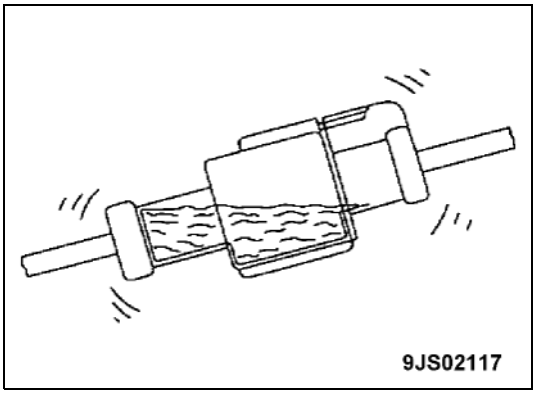

E. Oil or dirt stuck to connector.

- If oil or grease are stuck to the connector and an oil film is formed on the mating surface between the male and female pins, the oil will not let the electricity pass, so there will be defective contact. If there is oil or grease stuck to the connector, wipe it off with a dry cloth or blow it dry with compressed air and spray it with a contact restorer.
  - ★ When wiping the mating portion of the connector, be careful not to use excessive force or deform the pins.
  - ★ If there is oil or water in the compressed air, the contacts will become even dirtier, so completely remove the oil and water from the compressed air before cleaning with compressed air.

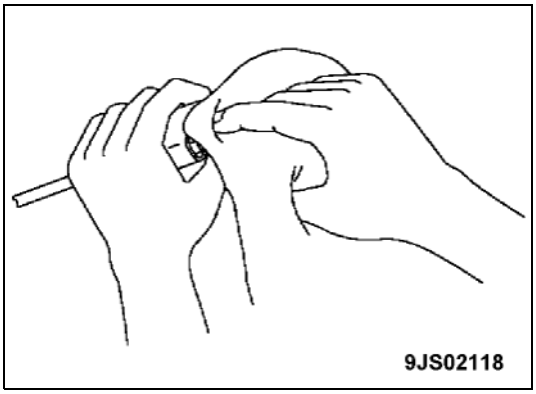

3. Removing, installing, and drying connectors and wiring harnesses
   A. Disconnecting connectors.

   - Hold the connectors when disconnecting.
     When disconnecting the connectors, hold the connectors. For connectors held by a screw, completely loosen the screw, then hold the male and female connectors in each hand and pull apart. For connectors which have a lock stopper, press the stopper down with your thumb and pull the connectors apart.
     ★ Never pull with one hand.

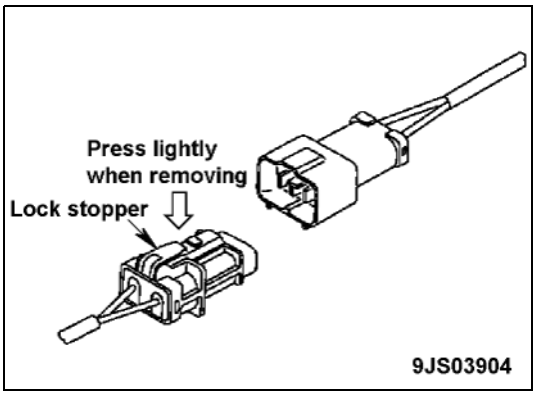

   B. When removing from clips

   - Both of the connector and clip have stoppers, which are engaged with each other when the connector is installed.

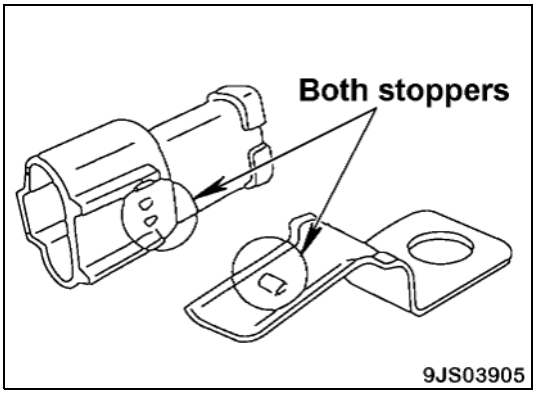

   - When removing a connector from a clip, pull connector in a parallel direction to the clip for removing stoppers.
     ★ If the connector is twisted up and down or to the left or right, the housing may break.

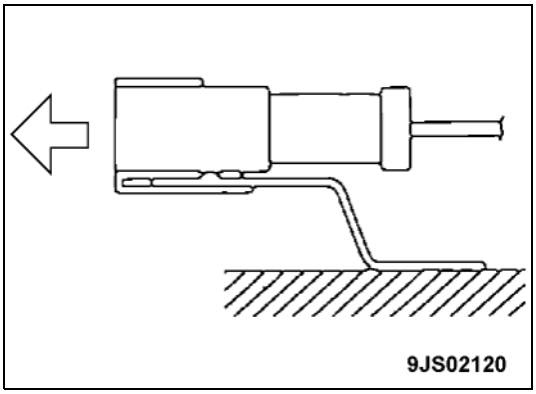

   C. Action to take after removing connectors.
   After removing any connector, cover it with a vinyl bag to prevent any dust, dirt, oil, or water from entering into the connector portion.

   ★ If the machine is left disassembled for a long time, it is particularly easy for improper contact to occur, so always cover the connector.

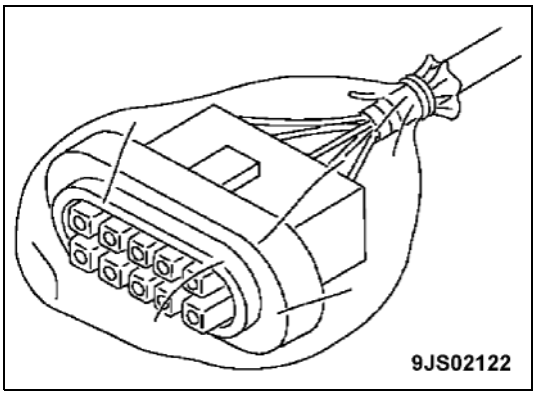

4. Connecting connectors
   A. Check the connector visually.

      - Check that there is no oil, dirt, or water stuck to the connector pins (mating portion). Check that there is no deformation, defective contact, corrosion, or damage to the connector pins. Check that there is no damage or breakage to the outside of the connector.

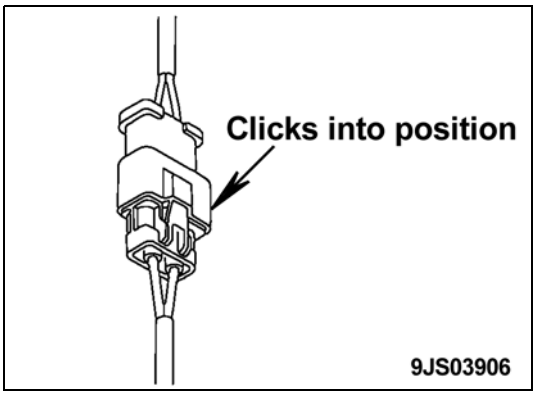

      - If there is any oil, water, or dirt stuck to the connector, wipe it off with a dry cloth. If any water has got inside the connector, warm the inside of the wiring with a dryer, but be careful not to make it too hot as this will cause short circuits.
      - If there is any damage or breakage, replace the connector.

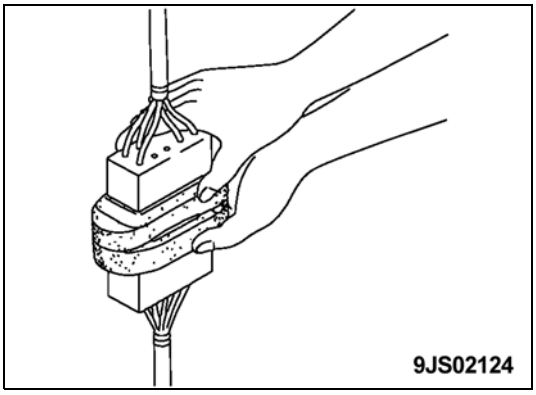

   B. Fix the connector securely.

      - Align the position of the connector correctly, and then insert it securely. For connectors with lock stopper, push in the connector until the stopper clicks into position.

   C. Correct any protrusion of the boot and any misalignment of the wiring harness.

      - For connectors fitted with boots, correct any protrusion of the boot. In addition, if the wiring harness is misaligned, or the clamp is out of position, adjust it to its correct position.

        ★ If the connector cannot be corrected easily, remove the clamp and adjust the position.
        ★ If the connector clamp has been removed, be sure to return it to its original position. Check also that there are no loose clamps.

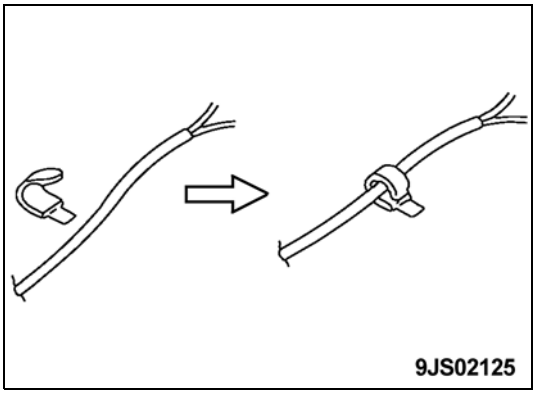

   D. Connecting DT connectors

      - Since the DT 8-pin and 12-pin heavy duty wire connectors have two latches respectively, push them in until they click two times.

        1. Male connector
        2. Female connector
        ★ Normal locking state (Horizontal): a, b, d
        ★ Incomplete locking state (Diagonal): c

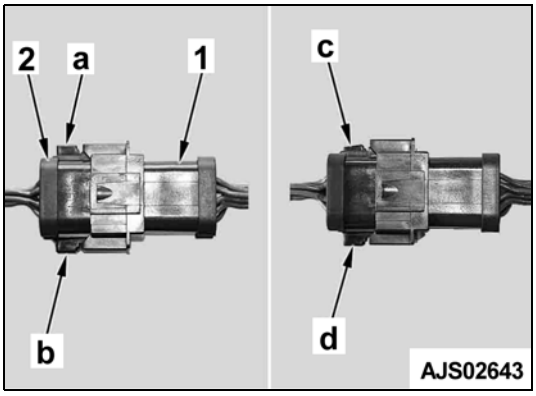

E. Drying wiring harness

- If there is any oil or dirt on the wiring harness, wipe it off with a dry cloth. Avoid washing it in water or using steam. If the connector must be washed in water, do not use high-pressure water or steam directly on the wiring harness. If water gets directly on the connector, do as follows.
- Disconnect the connector and wipe off the water with a dry cloth.
  - ★ If the connector is blown dry with compressed air, there is the risk that oil in the air may cause defective contact, so remove all oil and water from the compressed air before blowing with air.

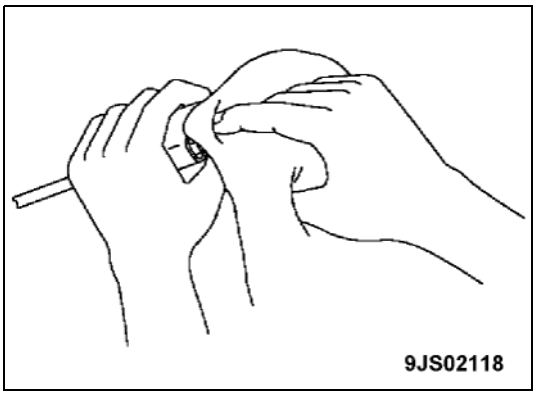

- Dry the inside of the connector with a dryer.
- If water gets inside the connector, use a dryer to dry the connector.
  - ★ Hot air from the dryer can be used, but regulate the time that the hot air is used in order not to make the connector or related parts too hot, as this will cause deformation or damage to the connector.

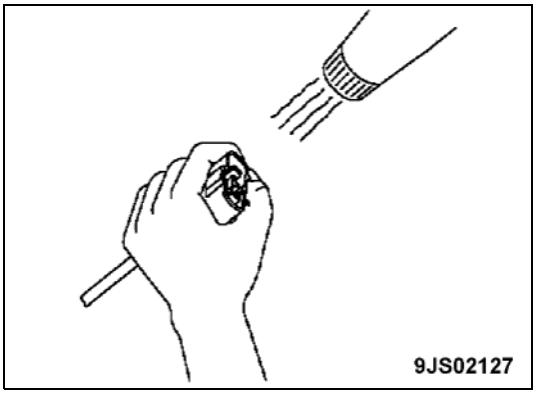

- Perform a continuity test on the connector.
- After drying, leave the wiring harness disconnected and perform a continuity test to check for any short circuits between pins caused by water.
  - ★ After completely drying the connector, blow it with contact restorer and reassemble.

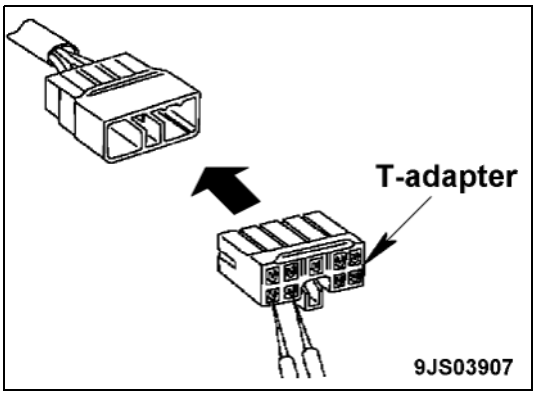

5. Handling controller
   A. The controller contains a microcomputer and electronic control circuits. These control all of the electronic circuits on the machine, so be extremely careful when handling the controller.

   B. Do not place objects on top of the controller.

   C. Cover the control connectors with tape or a vinyl bag. Never touch the connector contacts with your hand.

   D. During rainy weather, do not leave the controller in a place where it is exposed to rain.

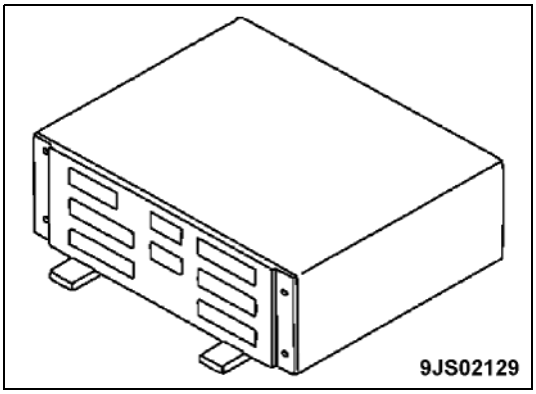

E. Do not place the controller on oil, water, or soil, or in any hot place, even for a short time. (Place it on a suitable dry stand).

F. Precautions when performing arc welding.

- When performing arc welding on the body, disconnect all wiring harness connectors connected to the controller. Fit an arc welding ground close to the welding point.

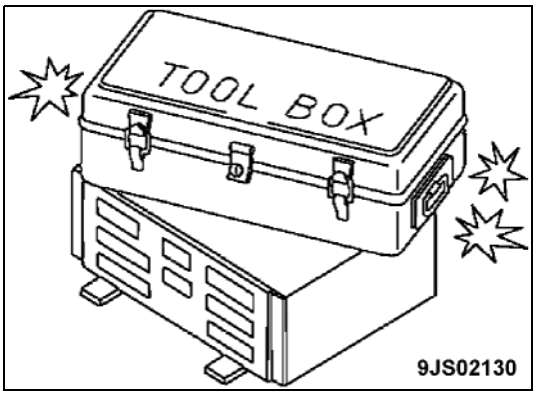

6. Points to remember when troubleshooting electric circuits.
   A. Always turn the power OFF before disconnecting or connecting connectors.

   B. Before performing troubleshooting, check that all the related connectors are properly inserted.

   - Disconnect and connect the related connectors several times to check.

   C. Always connect any disconnected connectors before going on to the next step.

   - If the power is turned ON with the connectors still disconnected, unnecessary abnormality displays will be generated.

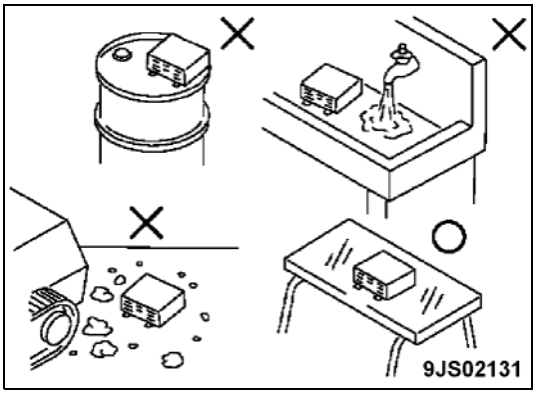

   D. When performing troubleshooting of circuits (measuring the voltage, resistance, continuity, or current), move the related wiring and connectors several times and check that there is no change in the reading of the tester.

   - If there is any change, there is probably a defective contact in that circuit.

Points To Remember When Handling Hydraulic Equipment

With the increase in pressure and precision of hydraulic equipment, the most common cause of failure is dirt (foreign material) in the hydraulic circuit. When adding hydraulic oil, or when disassembling or assembling hydraulic equipment, it is necessary to be particularly careful.

1. Be careful of the operating environment.
   - Avoid adding hydraulic oil, replacing filters, or repairing the machine in rain or high winds, or places where there is a lot of dust.

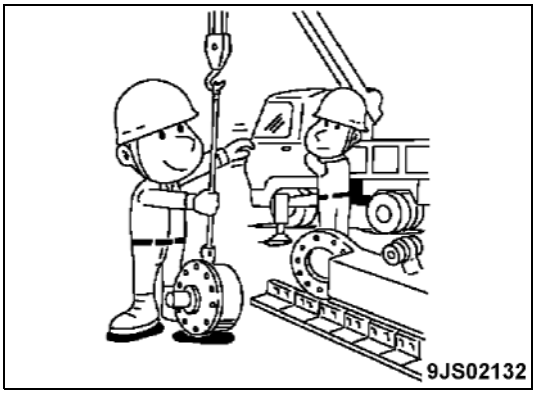

2. Disassembly and maintenance work in the field
   - If disassembly or maintenance work is performed on hydraulic equipment in the field, there is danger of dust entering the equipment. It is also difficult to check the performance after repairs, so it is desirable to use unit exchange. Disassembly and maintenance of hydraulic equipment should be performed in a specially prepared dust proof workshop, and the performance should be checked with special test equipment.

3. Sealing openings
   - After any piping or equipment is removed, the openings should be sealed with caps, tapes, or vinyl bags to prevent any dirt or dust from entering. If the opening is left open or is blocked with a rag, there is danger of dirt entering or of the surrounding area being made dirty by leaking oil so never do this. Do not simply drain oil out onto the ground, but collect it and ask the customer to dispose of it, or take it back with you for disposal.

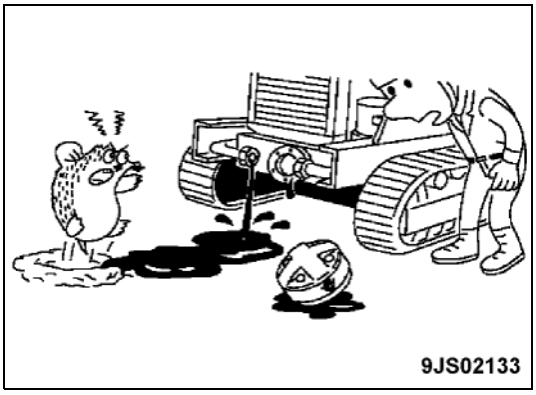

4. Do not let any dirt or dust get in during refilling operations
   - Be careful not to let any dirt or dust get in when refilling with hydraulic oil. Always keep the oil filler and the area around it clean, and also use clean pumps and oil containers. If an oil cleaning device is used, it is possible to filter out the dirt that has collected during storage, so this is an even more effective method.

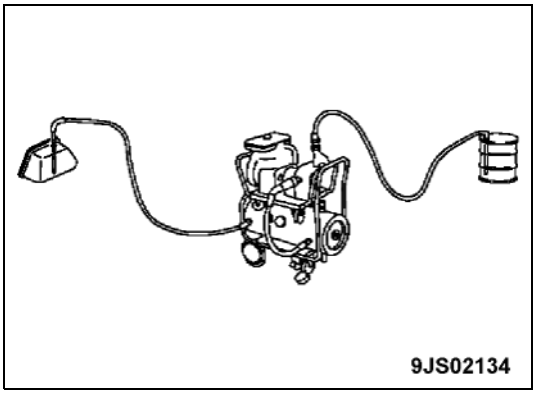

5. Change hydraulic oil when the temperature is high
   - When hydraulic oil or other oil is warm, it flows easily. In addition, sludge can also easily be drained out from the circuit together with the oil, so it is best to change oil when it is still warm. When changing the oil, as much as possible of the old hydraulic oil must be drained out. (Drain the oil from the hydraulic tank, also drain the oil from the filter and from the drain plug in the circuit.) If any old oil is left, contaminants and sludge in it will mix with the new oil and will shorten the life of the hydraulic oil.

6. Flushing operations
   - After disassembling and assembling the equipment, or changing the oil, use flushing oil to remove the contaminants, sludge, and old oil from the hydraulic circuit. Normally, flushing is performed twice: primary flushing is performed with flushing oil, and secondary flushing is performed with the specified hydraulic oil.

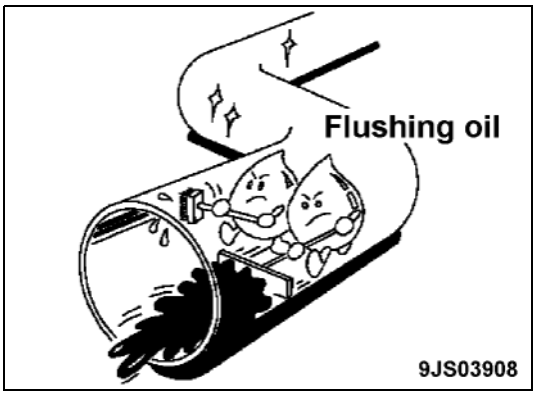

7. Cleaning operations
   - After repairing the hydraulic equipment (pump, control valve, etc.), or when running the machine, perform oil cleaning to remove the sludge or contaminants in the hydraulic oil circuit. The oil cleaning equipment is used to remove the ultra fine (about 3 microns) particles that the filter built in the hydraulic equipment cannot remove, so it is an extremely effective device.

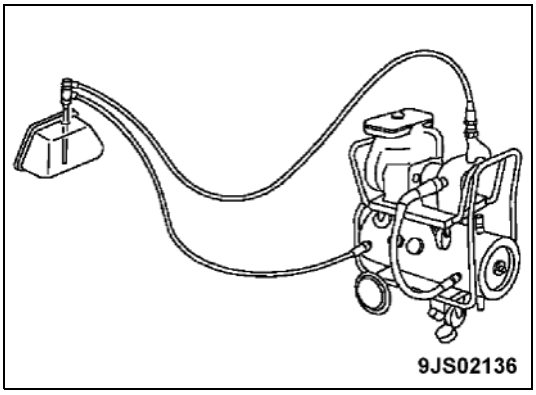

PUSH PULL COUPLER

WARNING! Before performing the following work, release the residual pressure from the hydraulic tank by opening the tank vent.

WARNING! Even if the residual pressure is released from the hydraulic tank, some hydraulic oil flows out when the hose is disconnected. Prepare an oil receiving container.

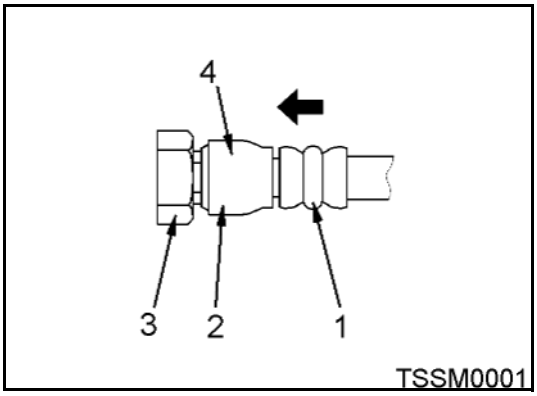

Type 1

Disconnection

1. Release the residual pressure from the hydraulic tank by opening the tank vent.
2. Hold adapter (1) and push hose joint (2) into mating adapter (3).
   - ★ The adapter can be pushed in about 3.5 mm (0.138").
   - ★ Do not hold the rubber cap portion (4).
3. After hose joint (2) is pushed into adapter (3), press rubber cap portion (4) against the adapter until it clicks.

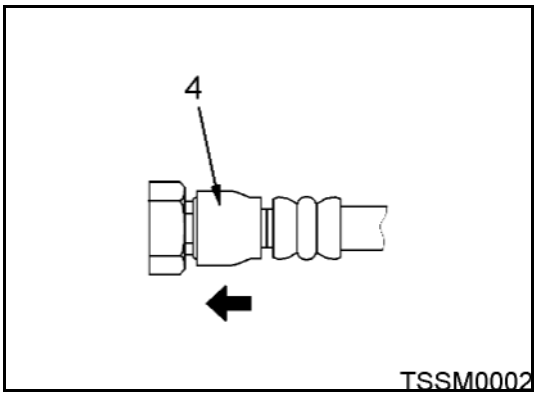

4. Hold hose adapter (1) or hose (5) and pull it out.
   - ★ Since some hydraulic oil flows out, prepare an oil receiving container.

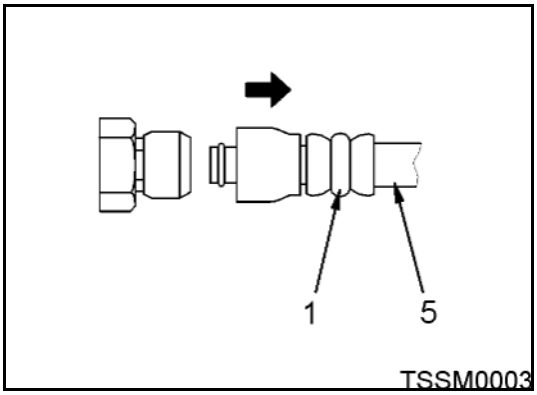

Connection

1. Hold hose adapter (1) or hose (5) and insert it into mating adapter (3), aligning them with each other.
   - ★ Do not hold rubber cap portion (4).
2. After inserting the hose into the mating adapter, pull it back to check its connecting condition.
   - ★ When the hose is pulled back, the rubber cap portion moves toward the hose about 3.5 mm (0.138"). This does not indicate an abnormality.

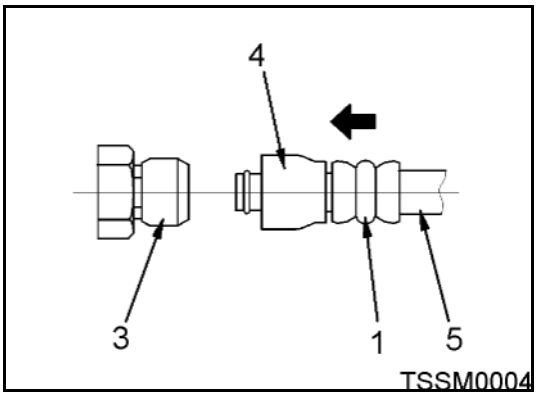

Type 2

Disconnection

1. Hold mouthpiece of the tightening portion and push body (2) straight in until sliding prevention ring (1) contacts surface **"a"** of hexagonal portion at the male end.

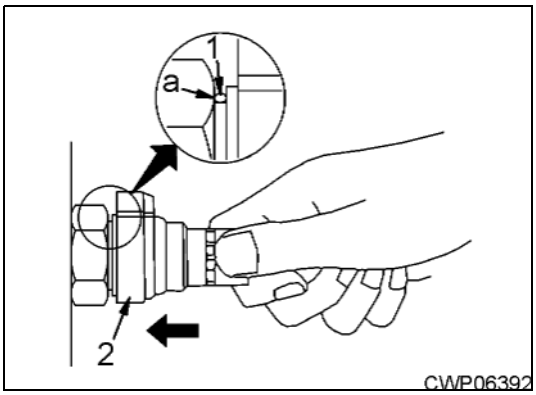

2. Hold in the condition in Step 1, and turn lever (4) clockwise to the right.

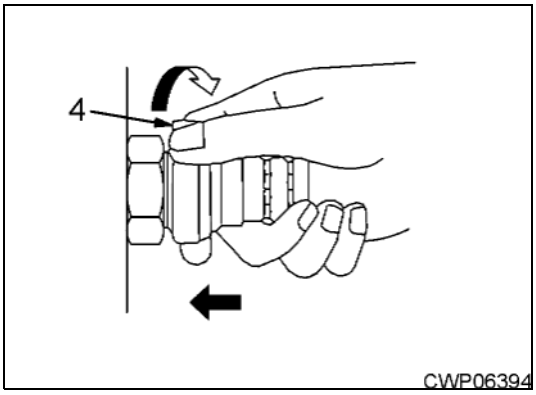

3. Hold in the condition in Steps 1 and 2, and pull out body (2) to disconnect.

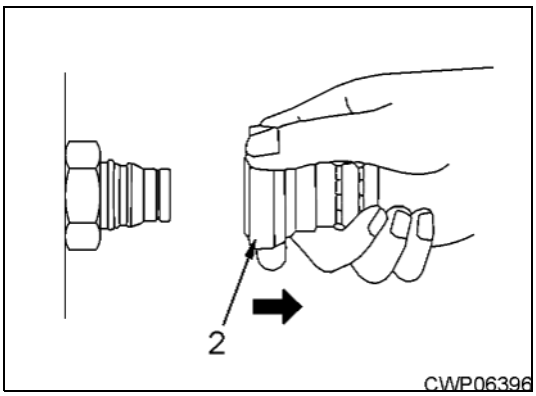

Connection

1. Hold the connector of the tightening portion and push body (2) in straight until sliding prevention ring (1) contacts surface **a** of the hexagonal portion at the male end to connect it.

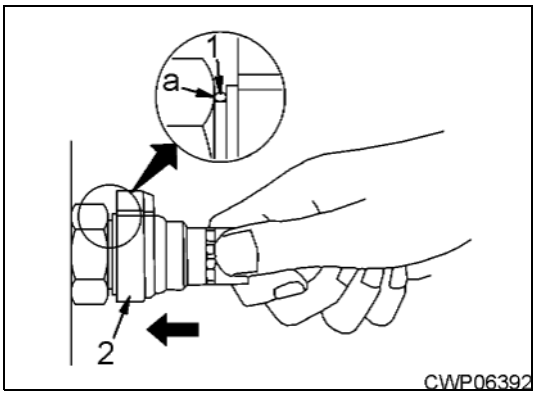

Type 3

Disconnection

1. Hold the connector of the tightening portion and push body (2) in straight until sliding prevention ring (1) contacts surface **a** of the hexagonal portion at the male end.

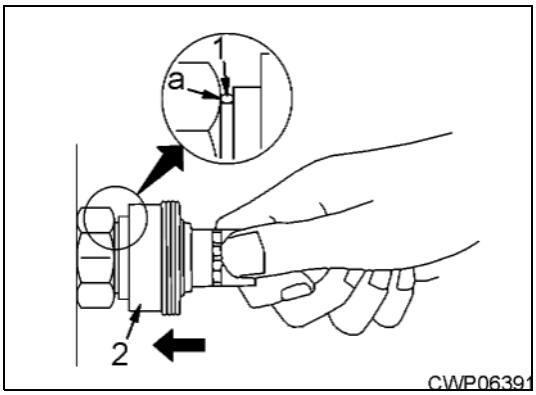

2. Hold in the condition in Step 1, and push until cover (3) contacts surface **a** of the hexagonal portion at the male end.

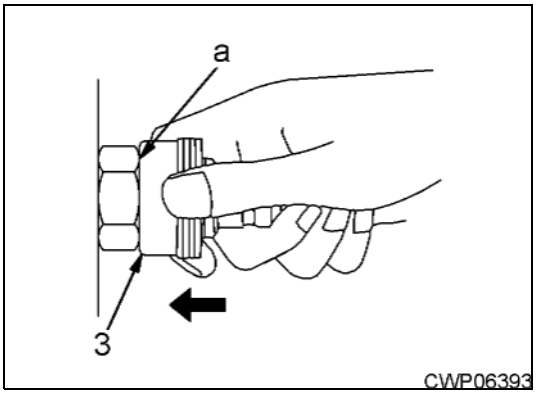

3. Hold in the condition in Steps 1 and 2, and pull out the whole body (2) to disconnect it.

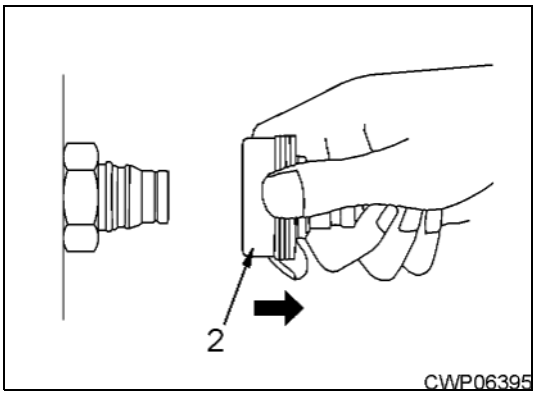

Connection

1. Hold the connector of the tightening portion and push body (2) in straight until the slide prevention ring (1) contacts surface **a** of the hexagonal portion at the male end to connect it.

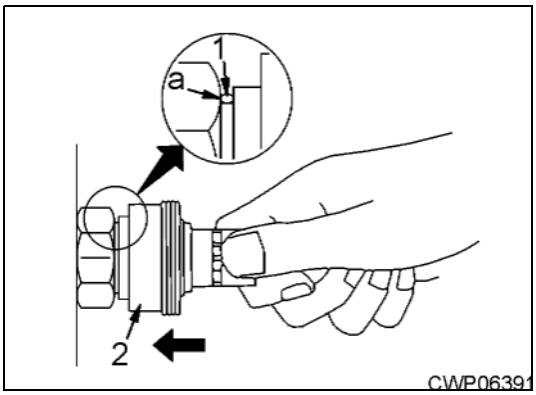

EXPLANATION OF MAINTENANCE STANDARD TERMS

- The maintenance standard values necessary for judgment of products and parts are described by the following terms.

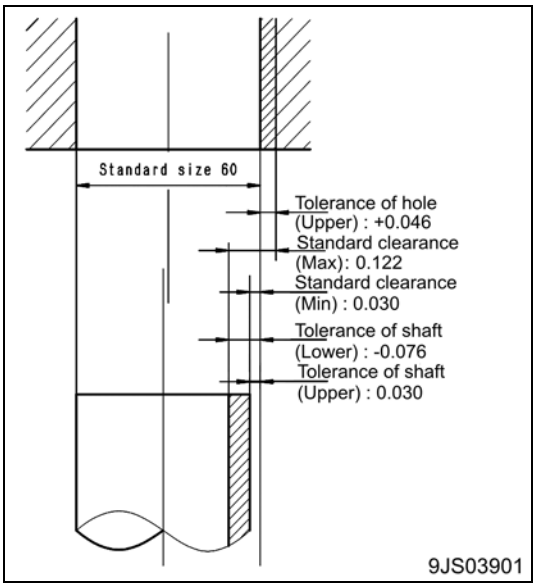

1. Standard Size And Tolerance
   - To be accurate, the finishing size of parts is a little different from one to another.
   - To specify a finishing size of a part, a temporary standard size is set and an allowable difference from that size is indicated.
   - The above size set temporarily is called the “standard size” and the range of difference from the standard size is called the “tolerance”.
   - The tolerance with the symbols of + or – is indicated on the right side of the standard size.

Example:

Standard size	Tolerance
120	-0.022 -0.126

★ The tolerance may be indicated in the text and a table as [standard size (upper limit of tolerance/lower limit of tolerance)].
Example) 120 (–0.022/–0.126)

- Usually, the size of a hole and the size of the shaft to be fitted to that hole are indicated by the same standard size and different tolerances of the hole and shaft. The tightness of fit is decided by the tolerance.
- Indication of size of rotating shaft and hole and relationship drawing of them

Example:

Standard size	Tolerance	
	Shaft	Hole
60	–0.030 –0.076	+0.046 0

2. Standard Clearance And Standard Value
   - The clearance made when new parts are assembled is called the “standard clearance“, which is indicated by the range from the minimum clearance to the maximum clearance.
   - When some parts are repaired, the clearance is generally adjusted to the standard clearance.
   - A value of performance and function of new products or equivalent is called the “standard value“, which is indicated by a range or a target value.
   - When some parts are repaired, the value of performance/function is set to the standard value.

3. Standard Interference
   - When the size of a hole is smaller than the size of a shaft because of the standard size and tolerance, the difference between these sizes is called the “interference”.
   - The range (A – B) from the difference (A) between the minimum size of the shaft and the maximum size of the shaft to the difference (B) between the maximum size of the shaft and the minimum size of the hole is the “standard interference”.
   - After repairing or replacing some parts, measure the size of their hole and shaft and check that the interference is in the standard range.